USER MANUAL

Edinburgh

REGENCY CO SLEEPER

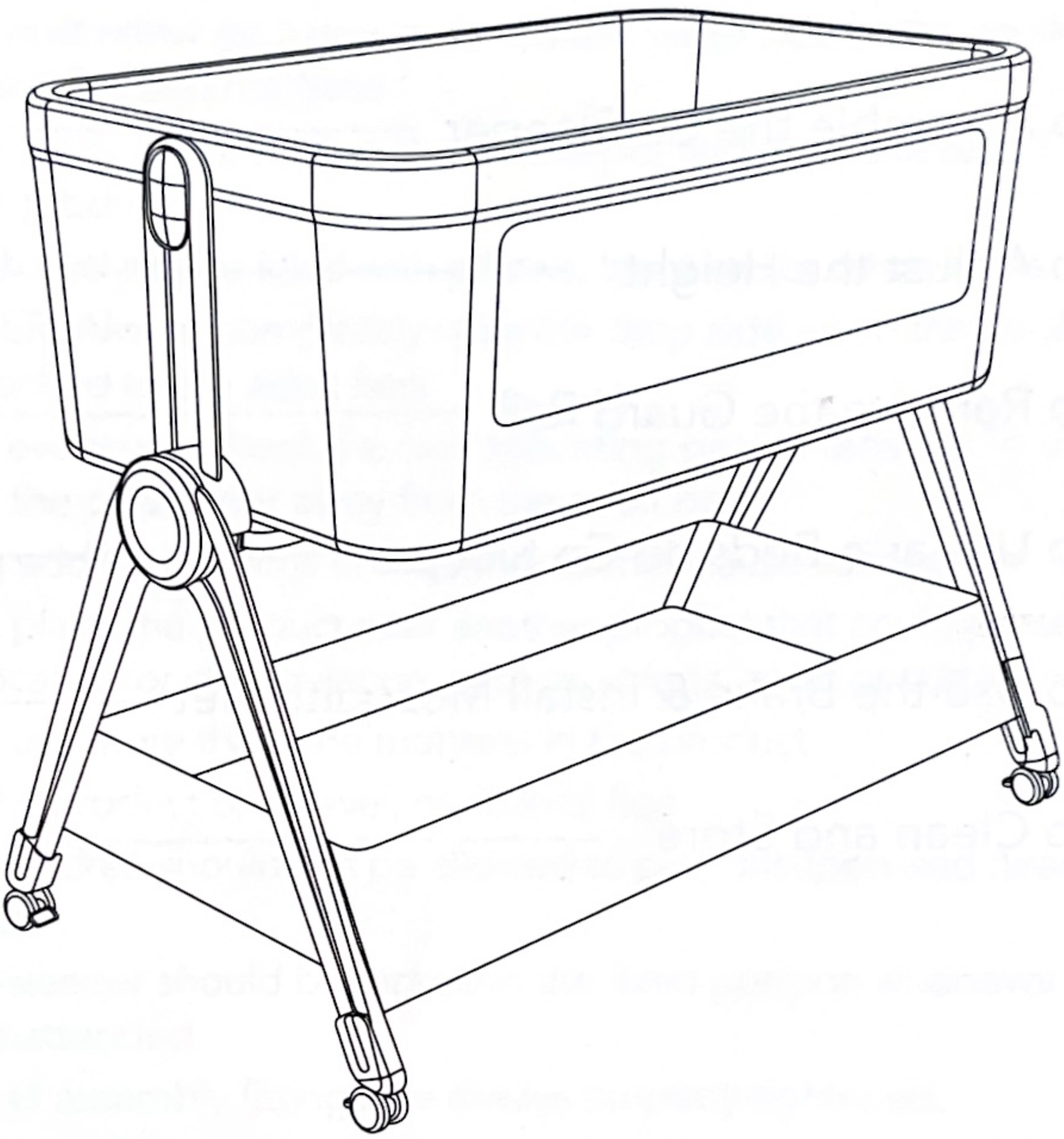

IMPORTANT! READ CAREFULLY
& KEEP FOR FUTURE REFERENCE

CONTENTS

WARNING 3

Parts List 5

How to Assemble the Co Sleeper 6

How to Adjust the Height 7

How to Remove the Guard Rail 8

How to Use as a Bedside Co Sleeper 9

How to Use the Brake & Install Mosquito Net 10

How to Clean and Store 11

⚠ IMPORTANT! READ CAREFULLY AND KEEP FOR FUTURE REFERENCE.

WARNING!

- Do not use this product without first reading the instructions for use.
- This product is intended for infants from birth up to 6 months, 9kg, or until they can sit unaided or pull or push themselves up on their hands and knees.
- There must never be a gap between the lower side of the co-sleeper and the adult bed mattress.
- If there is any gap between the co-sleeper and the adult bed, DO NOT use the product.
- Gaps should not be filled with pillows, blankets, or other items.
- DANGER! Always completely raise the drop side when the co-sleeper is not attached to the adult bed.
- Before every use, check the bed mounting system tension. To do this, try pulling the co-sleeper away from the adult bed.
- Placing additional items in the product may cause suffocation.
- Do not place the product near another product that could present a risk of suffocation or strangulation, such as strings, blind or curtain cords, etc.
- Do not use more than one mattress in the product.
- Place the product on a level, horizontal floor.
- Young children should not be allowed to play unsupervised near the co-sleeper.
- The co-sleeper should be locked in the fixed position whenever the child is left unattended.
- Ensure all assembly fittings are always properly tightened.
- Check that no screws are loose, as a child could trap parts of their body or clothing (e.g. strings, necklaces, ribbons for baby dummies, etc.), creating a strangulation hazard.

WARNING

- Be aware of the risk posed by burning cigarettes, open flames, or other sources of high heat, such as electric heaters and gas water heaters, near the co-sleeper.
- DO NOT use the co-sleeper if any parts are missing, damaged, or broken. Contact the merchant for replacement parts and instruction manuals if needed. DO NOT substitute parts.
- Do not use the mattress if any parts are broken, torn, or missing. Use only spare parts approved by the manufacturer.
- Only use the mattress supplied with this co-sleeper. Do not add a second mattress, as this may create a suffocation hazard.
- The co-sleeper is intended for use with adult beds that are between 57cm and 69cm from the floor to the top of the mattress.
- The co-sleeper is intended for use with standard adult beds only. Do not use it with waterbeds or rounded beds.
- Do not use any mounting system other than the one described in the instruction manual.
- The co-sleeper should never be used in an inclined position.
- To avoid the risk of suffocation, always attach the co-sleeper to the adult bed using the mounting system described in the instruction manual.

WARNING:

a. Infant should be placed to sleep on a firm, flat surface.
b. Place infant on their back when using this product.
c. Do not put objects or accessories in an infant's sleep environment.
d. Do not place this product near a blind, cord, strap or similar item that could become wrapped around an infant's neck.

Parts List

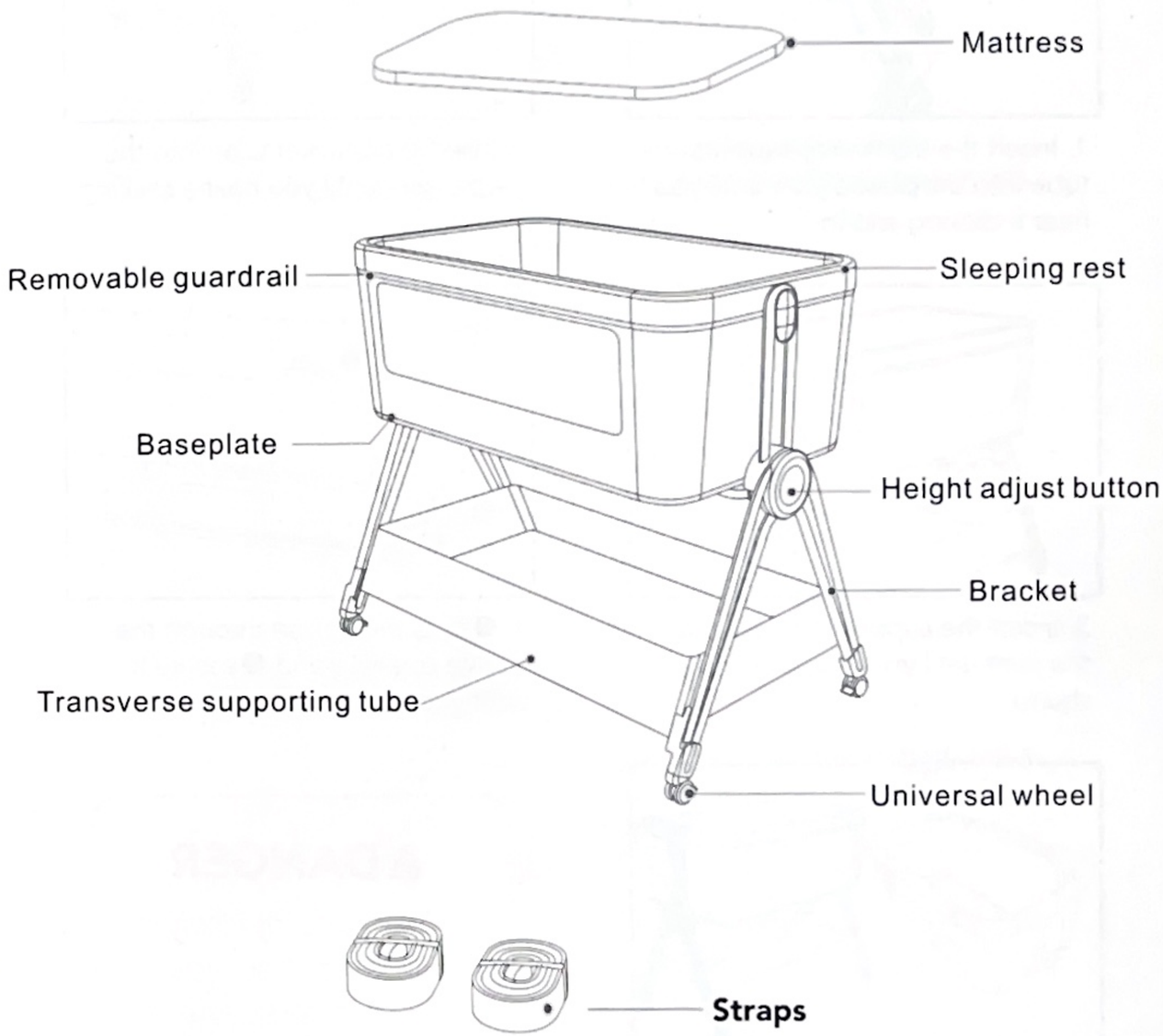

How to Assemble the Co Sleeper

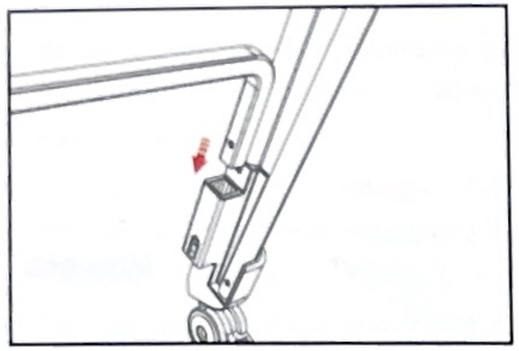

1. Insert the transverse supporting tube into the plastic joint until you hear a clicking sound.

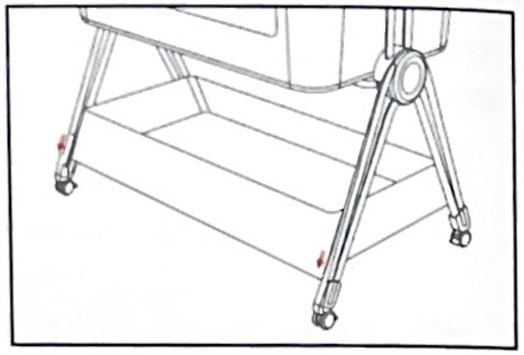

2. Insert the bracket tube into the plastic joint until you hear a clicking sound.

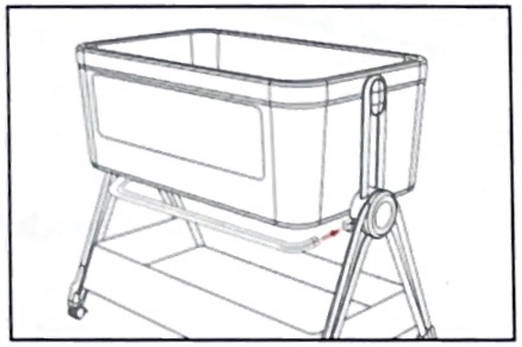

3. Insert the supporting tube into the joint until you hear a clicking sound.

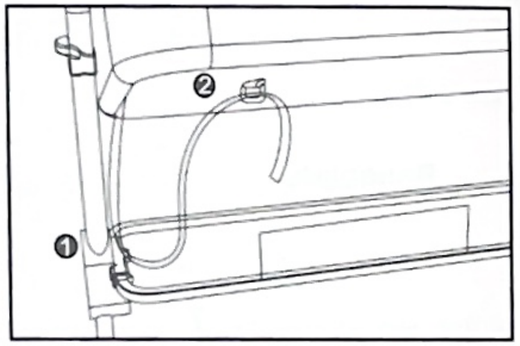

4. ❶ Pass the ribbon through the square opening and ❷ secure it tightly to the D-ring.

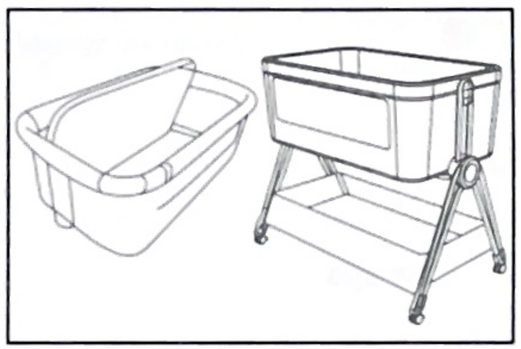

5. Place the mattress in the co sleeper and ensure it lies flat. The co sleeper is now fully assembled.

⚠DANGER

Always completely raise the drop side when the co sleeper is not attached to the adult bed!

How to Adjust the Height

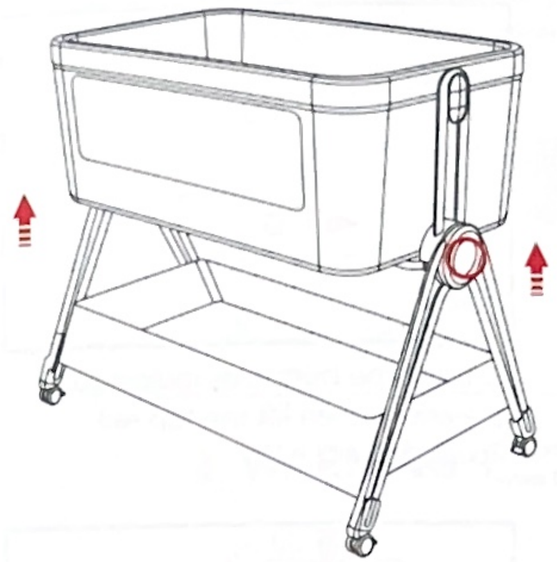

1. Lift up the plastic height adjustment handles on both sides to **raise** the co-sleeper.

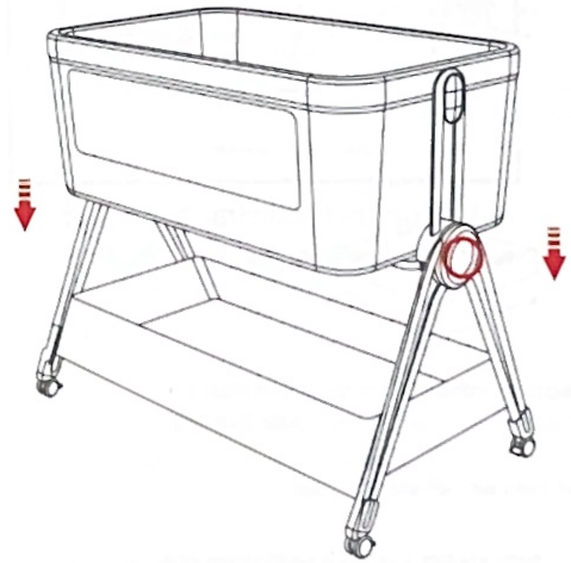

2. Lift up the plastic height adjustment handles on both sides, then **lower** the co-sleeper to the desired height.

⚠ WARNING

When adjusting the height, ensure the angle of inclination of the co-sleeper base (head to feet) does not exceed 7°

How to Remove the Guard Rail

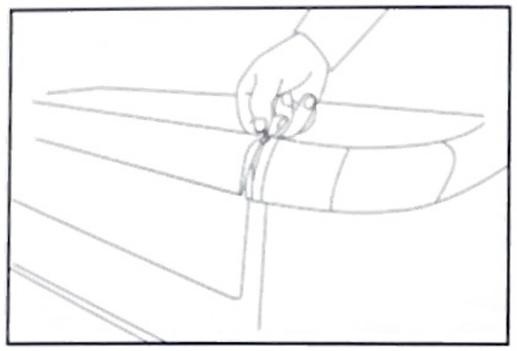

1. Unzip both sides of the guard rail.

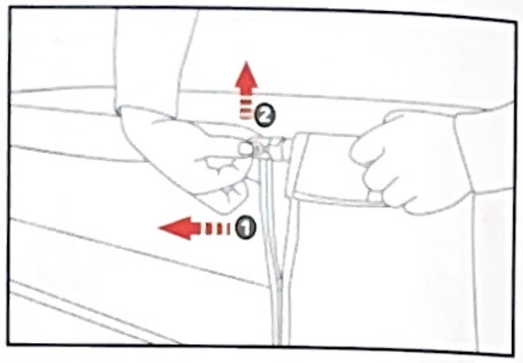

2. Press the button as indicated by the arrow, then lift the top rail upwards.

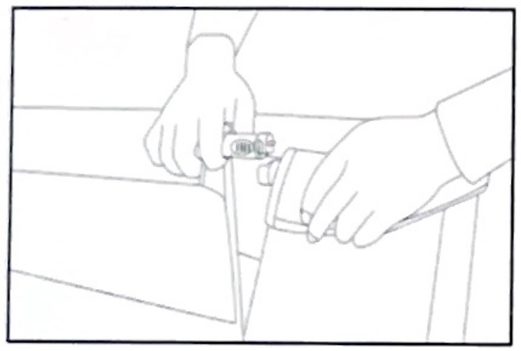

3. Remove both ends of the guard rail.

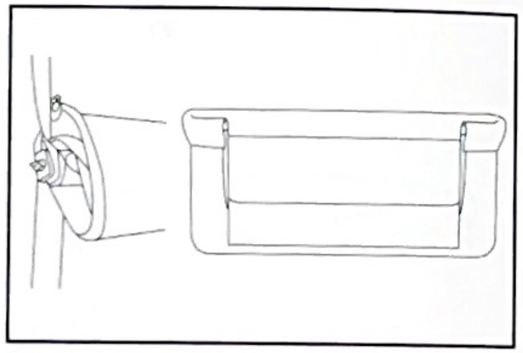

4. Roll up the guardrail tube and fix it by elastic cord.

⚠ DANGER

Always completely raise the drop side when the co sleeper is not attached to the adult bed!

How to Use as a Bedside Co Sleeper

Pass the attachment straps underneath the adult bed mattress, then fasten the buckles securely.

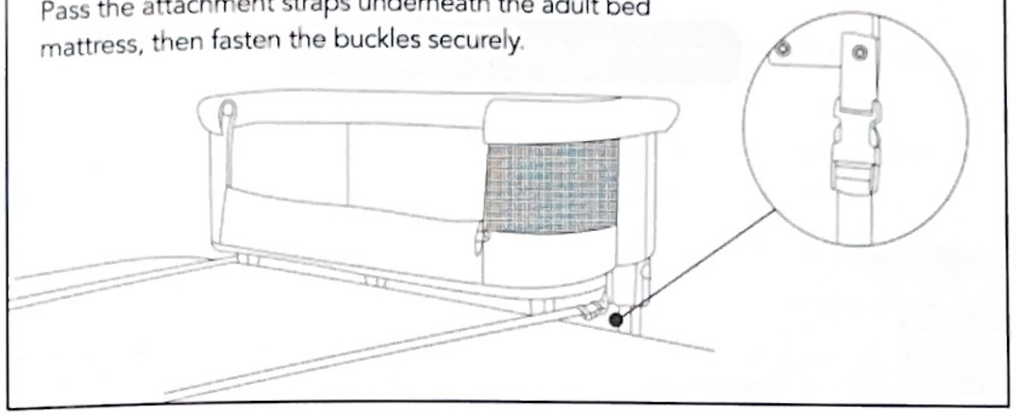

⚠ WARNING **The attachment system must ALWAYS be used when the co-sleeper is in bedside mode.**

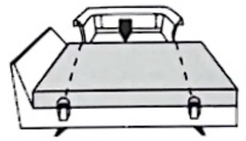

1. Align the co-sleeper directly next to the adult bed. Pass the attachment straps underneath the mattress and around the bed frame.

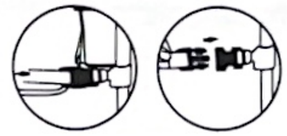

2. Connect the attachment buckles together, then pull the straps tight to secure the co-sleeper firmly to the adult bed.

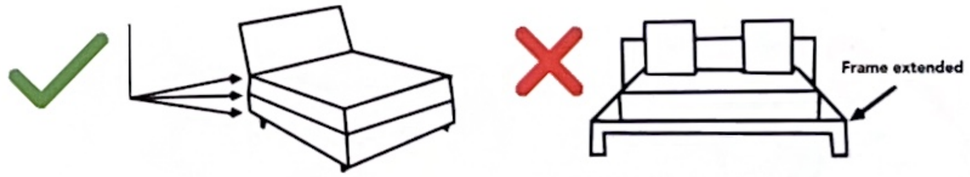

Ensure the adult bed **mattress, box spring and bed frame are aligned**
Do not use the co-sleeper if the bed frame is extended or creates a gap.

Not suitable for use next to water beds or children's beds.

⚠ ADDITIONAL WARNINGS

- Adjust the height of the co-sleeper to match the height of the adult bed so both sleeping surfaces are level and securely connected.
- When using the co-sleeper in bedside mode, the guard rail must be lowered and secured out of the way.
- Position the co-sleeper so the short side is firmly against the adult mattress, leaving no gap between the two.

How to Use the Brake & Install Mosquito Net

How to use the Brake

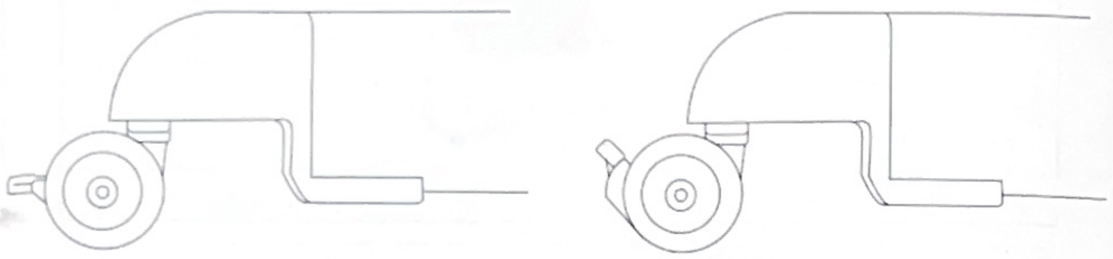

- Step down on the brake to lock the wheels.
- Lift the brake to unlock the wheels.

How to Install the Mosquito Net



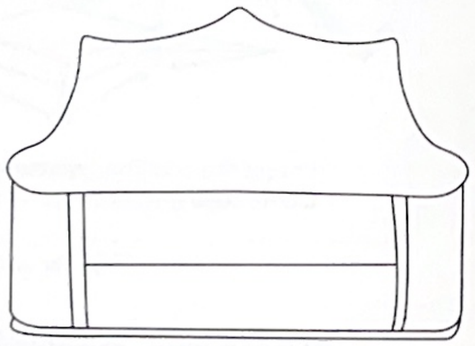

- Attach the mosquito net clips to both sides of the guard rail tube, then fully cover the co-sleeper with the mosquito net.
- The mosquito net is fully installed. *(Mosquito net is an optional accessory and is not included as a standard part.)*

How to Clean and Store

- To prevent mold formation, store the product after it has dried, and do not place it in a humid environment.
- Clean the plastic and metal parts with a wet cloth or with mild detergent. Do not use solvents, ammonia or benzene.
- Dry metal parts immediately after contact with water to avoid the formation of rust.
- Keep all the parts clean and dry.



Do Not Dry Clean | Maximum 40°C Permanent Press Cycle | Iron On Low Heat | Flat Dry

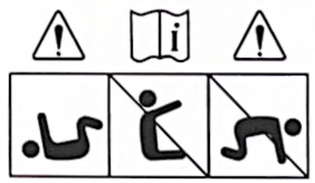

Do not use the co-sleeper once your child can sit up, kneel or crawl.



Filling: Resin Cotton
100% Polyester
WARNING:
Keep away from fire!

SUPPLIED BY BABY FACTORY (NZ) LTD
www.babyfactory.co.nz